FLOW DIVIDER VLVE	·FDT3-**-**F TYPE	Flange connection	29.4 MPa
DE CO VALVE	·TDCV3-**-**F TYPE		

・Dimensions (FDT3-08,12/TDCV3-08,12)

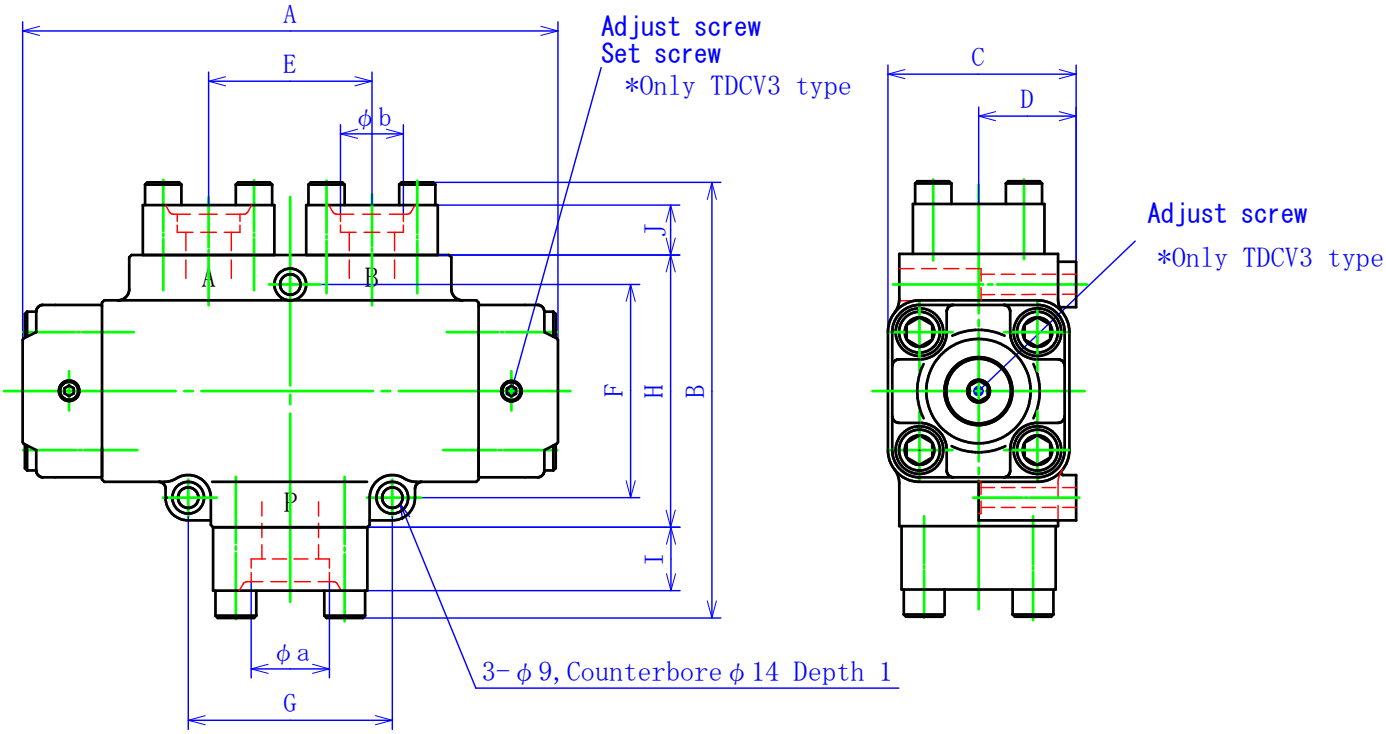

・Specification

Type			Port P Standard flow (l/min.)	Port P flow range (l/min.)	Pressure loss (MPa)	Connecting pipe P	Connecting pipe A・B	A	B	C	D	E	F	G	H	I	J	φa	φb	Weight (kg)
FDT3 TDCV3	08	50 F	50	42 ～ 60	±0.3 0.7	SSA 25 (1″)	SSA 20 (3/4″)	236	192	83	43	72	94	90	120	28	22	34.5	27.7	13.8
		60 F	60	50 ～ 72																
		80 F	80	67 ～ 95																
		100 F	100	85 ～ 120																
	12	120 F	120	100 ～ 145		SSA 40 (1·1/2″)	SSA 25 (1″)	298	242	103	53	96	122	114	150	36	28	49.1	34.5	26.2
		160 F	160	135 ～ 195																
		200 F	200	165 ～ 240																
		240 F	240	200 ～ 290																
		300 F	300	260 ～ 350																